APPLICABLE STANDARD				
RATING	OPERATING TEMPERATURE RANGE	-55 °C TO 85 °C	STORAGE TEMPERATURE RANGE	-10 °C TO 50 °C (PACKED CONDITION)
	VOLTAGE	50 V AC / DC	OPERATING OR STORAGE HUMIDITY RANGE	RELATIVE HUMIDITY 90 % MAX (NOT DEWED)
	CURRENT	0.5 A	APPLICABLE CABLE	t=0.3±0.03mm, GOLD PLATING

SPECIFICATIONS

ITEM	TEST METHOD	REQUIREMENTS	QT	AT
CONSTRUCTION				
GENERAL EXAMINATION	VISUALLY AND BY MEASURING INSTRUMENT.	ACCORDING TO DRAWING.	×	×
MARKING	CONFIRMED VISUALLY.		×	×
ELECTRIC CHARACTERISTICS				
VOLTAGE PROOF	250 V AC FOR 1 min.	NO FLASHOVER OR BREAKDOWN.	×	×
INSULATION RESISTANCE	100 V DC.	500 MΩ MIN.	×	×
CONTACT RESISTANCE	AC/DC 20 mV MAX (AC:1 KHz) , 1 mA .	100 mΩ MAX. INCLUDING FPC,FFC BULK RESISTANCE (L=8mm)	×	×
MECHANICAL CHARACTERISTICS				
VIBRATION	FREQUENCY 10 TO 55 Hz, HALF AMPLITUDE 0.75 mm, FOR 10 CYCLES IN 3 DIRECTIONS.	① NO ELECTRICAL DISCONTINUITY OF 1 μs. ② CONTACT RESISTANCE: 100 mΩ MAX. ③ NO DAMAGE, CRACK AND LOOSENESS OF PARTS.	×	—
SHOCK	981 m/s^2 , DURATION OF PULSE 6 ms AT 3 TIMES IN 3 DIRECTIONS.		×	—
MECHANICAL OPERATION	20 TIMES INSERTIONS AND EXTRACTIONS.	① CONTACT RESISTANCE: 100 mΩ MAX. ② NO DAMAGE, CRACK AND LOOSENESS OF PARTS.	×	—
FPC RETENTION FORCE	MEASURED BY APPLICABLE FPC. (THICKNESS OF FPC SHALL BE t=0.30mm AT INITIAL CONDITION.)	DIRECTION OF INSERTION : 0.3N × NUMBER OF CONTACTS MIN. (***note 1***)	×	—
ENVIRONMENTAL CHARACTERISTICS				
CORROSION SALT MIST	EXPOSED AT 35±2 °C , 5 % SALT WATER SPRAY FOR 96 h.	① CONTACT RESISTANCE: 100 mΩ MAX. ② NO DAMAGE, CRACK AND LOOSENESS OF PARTS. ③ NO EVIDENCE OF CORROSION WHICH AFFECTS TO OPERATION OF CONNECTOR.	×	—
RAPID CHANGE OF TEMPERATURE	TEMPERATURE-55→+15TO+35→+85→+15TO+35°C TIME 30→ 2 TO 3 → 30→ 2 TO 3 min UNDER 5 CYCLES.	① CONTACT RESISTANCE: 100 mΩ MAX. ② INSULATION RESISTANCE: 50 MΩ MIN. ③ NO DAMAGE, CRACK AND LOOSENESS OF PARTS.	×	—
DAMP HEAT (STEADY STATE)	EXPOSED AT 40±2 °C, RELATIVE HUMIDITY 90 TO 95 %, 96 h.		×	—
DAMP HEAT,CYCLIC	EXPOSED AT -10 TO +65 °C, RELATIVE HUMIDITY 90 TO 96 %, 10 CYCLES,TOTAL 240 h.	① CONTACT RESISTANCE: 100 mΩ MAX. ② INSULATION RESISTANCE: 1 MΩ MIN. (AT HIGH HUMIDITY) ③ INSULATION RESISTANCE: 50 MΩ MIN. (AT DRY) ④ NO DAMAGE, CRACK AND LOOSENESS OF PARTS.	×	—

	COUNT	DESCRIPTION OF REVISIONS	DESIGNED	CHECKED	DATE
0					

REMARK

This product is RoHS compliant.

Unless otherwise specified, refer to JIS C 5402.

APPROVED	RI. TAKAYASU	09. 10. 20
CHECKED	FN. TAMURA	09. 10. 20
DESIGNED	TS. OONO	09. 10. 19
DRAWN	TS. OONO	09. 10. 19

Note QT:Qualification Test AT:Assurance Test X:Applicable Test

DRAWING NO. ELC4-326746-01

HRS

SPECIFICATION SHEET

HIROSE ELECTRIC CO., LTD.

PART NO. FH34SW-12S-0.5SH(50)

CODE NO. CL580-1233-3-50 △0

FORM HD0011-2-1

SPECIFICATIONS

ITEM	TEST METHOD	REQUIREMENTS	QT	AT
DRY HEAT	EXPOSED AT 85±2 °C, 96 h.	① CONTACT RESISTANCE: 100 mΩ MAX. ② NO DAMAGE, CRACK AND LOOSENESS OF PARTS.	×	—
COLD	EXPOSED AT -55±3°C, 96 h.		×	—
SURPHUR DIOXIDE [JIS C 0090]	EXPOSED AT 40±2 °C , RELATIVE HUMIDITY 80±5% 25±5 ppm FOR 96 h.	① CONTACT RESISTANCE: 100 mΩ MAX. ② NO DAMAGE, CRACK AND LOOSENESS OF PARTS. ③ NO EVIDENCE OF CORROSION WHICH AFFECTS TO OPERATION OF CONNECTOR.	×	—
HYDROGEN SULPHIDE [JIS C 0092]	EXPOSED AT 40±2 °C , RELATIVE HUMIDITY 80±5% , 10 TO 15 ppm FOR 96 h.		×	—
SOLDERABILITY	SOLDERED AT SOLDER TEMPERATURE, 235±5°C FOR IMMERSION DURATION, 2±0.5 sec.	A NEW UNIFORM COATING OF SOLDER SHALL COVER A MINIMUM OF 95 % OF THE SURFACE BEING IMMERSED.	×	—
RESISTANCE TO SOLDERING HEAT	1) REFLOW SOLDERING : PEAK TMP. 250 °C MAX . REFLOW TMP. OVER 230 °C WITHIN 60 sec. 2) SOLDERING IRONS : TMP. 350 ± 10 °C FOR 5±1 sec .	NO DEFORMATION OF CASE OF EXCESSIVE LOOSENESS OF THE TERMINALS.	×	—

(note1)

FASTEN FPC ON PCB OR SOMETHING FIXED IF FORCE IN VERTICAL DIRECTION SHALL BE PREDICTED.
DO NOT CLOSE THE ACTUATOR BEFORE INSERTING FPC EVEN AFTER THE CONNECTOR IS MOUNTED ONTO A PCB. CLOSING THE ACTUATOR WITHOUT FPC COULD MAKE THE CONTACT GAP SMALLER, WHICH INCREASES THE FPC INSERTION FORCE.
THIS CONNECTOR HAS CONTACTS ON THE TOP.

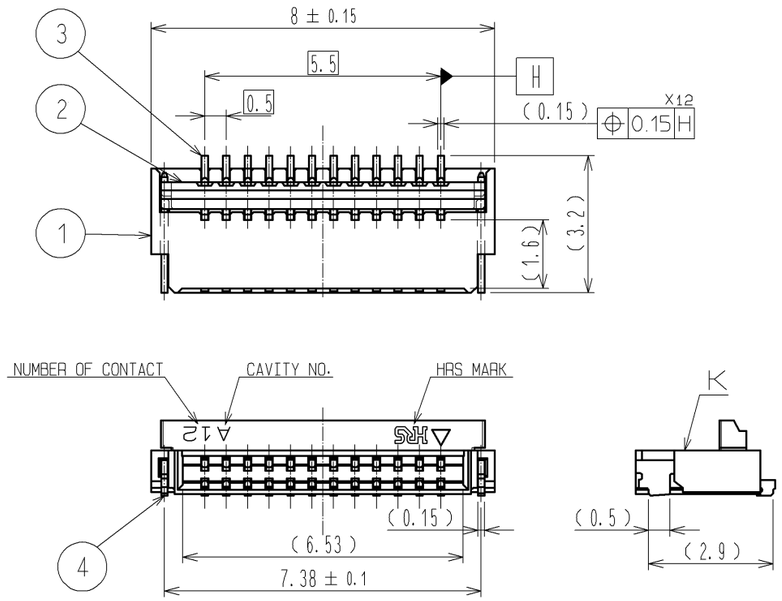

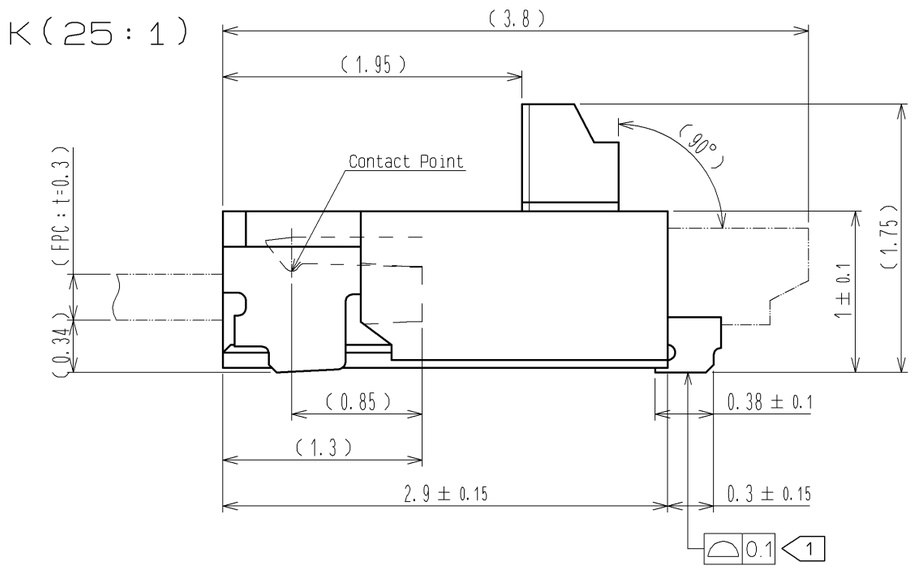

RECOMMENDED PCB MOUNTING PATTERN (No scale)

(RECOMMENDED METAL MASK THICKNESS:t=0.1)

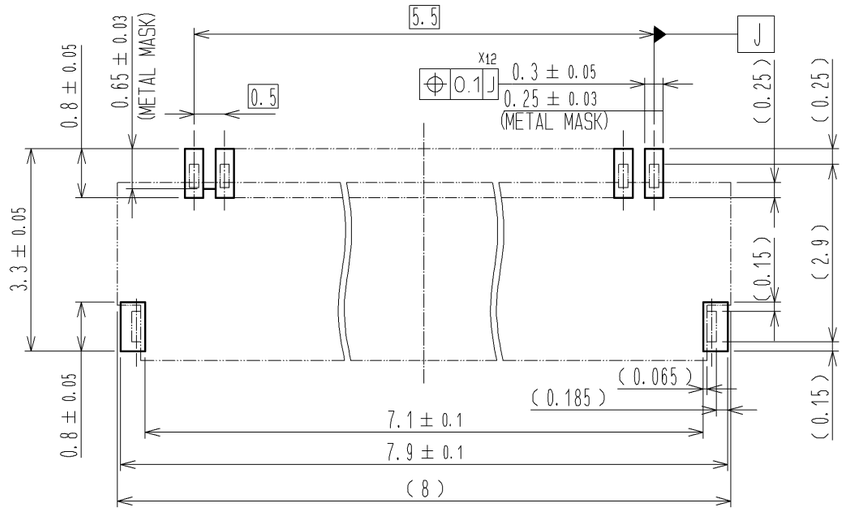

RECOMMENDED FPC (No scale)

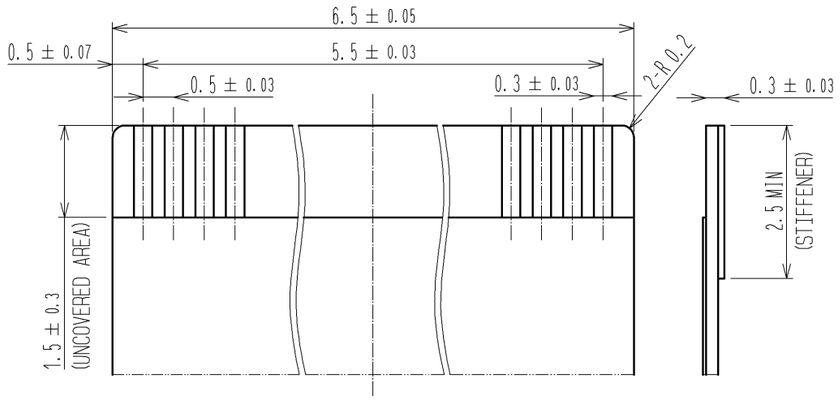

※Recommended stiffener material:polyimide,heat cured adhesive.
※The recommended FPC above is shared in FH34SR FPC design(bottom contact) and FH34S FPC design(top contact).
※For the compatibility with FH19SC series connectors(bottom contact). Change the length of uncoverd area to be 2.5mm +/-0.3 , And the stiffener length to be 3.5mmMIN. (The pin numbers will not be compatible)

NOTE
1 Lead CO-Planarity including reinforced metal fittings shall be 0.1 MAX.
2 To be delivered with tape and reel packages. See attached packaging specifications for details.
3 Note that preventive hole for sink mark could be added for improvement. The quality remains good,even with the dark spots,which could occasionally occur on molded plastic.
4 This product satisfies halogen free requirements defined as 900 ppm maximum chlorine, 900 ppm maximum bromine, and 1500 ppm maximum total of chlorine and bromine.

NO.	MATERIAL	FINISH , REMARKS	NO.	MATERIAL	FINISH , REMARKS
4	PHOSPHOR BRONZE (PLATED MATERIAL)	TIN PLATING (REFLOW FINISHED) 1μmMIN OVER COPPER 0.3μm MIN	8	(CONNECTOR)	
3	PHOSPHOR BRONZE	(CONTACT AREA LEAD) GOLD PLATING 0.05μmMIN OVER NICKEL 1μm MIN (OTHER) NICKEL PLATING 1μmMIN	7	POLYSTYRENE	
2	PA	LIGHT BROWN UL94HB	6	POLYESTER	
1	LCP	BEIGE UL94V-0	5	POLYSTYRENE	

UNITS	SCALE	COUNT	DESCRIPTION OF REVISIONS	DESIGNED	CHECKED	DATE
mm	7 : 1					

HIROSE ELECTRIC CO., LTD.

APPROVED	: RI. TAKAYASU	09. 10. 29	DRAWING NO.	EDC3-326746-01
CHECED	: FN. TAMURA	09. 10. 29	PART NO.	FH34SW-12S-0.5SH(50)
DESIGNED	: TS. OONO	09. 10. 29		
DRAWN	: TS. OONO	09. 10. 29	CODE NO.	CL580-1233-3-50

1/4

EMBOSSED CARRIER TAPE DIMENSION(2:1)

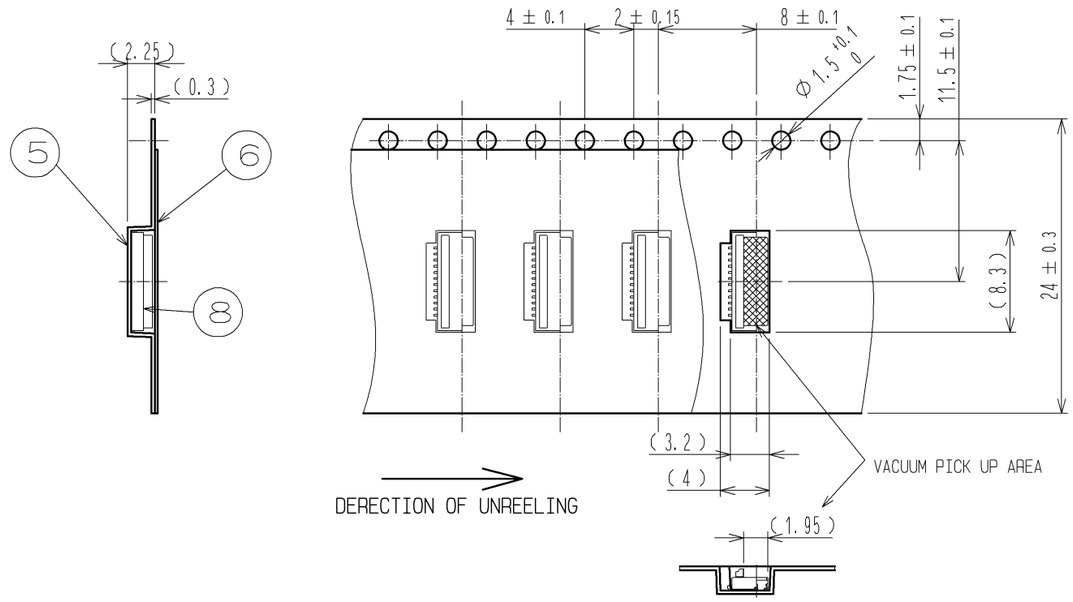

REEL DIMENSION (No scale)

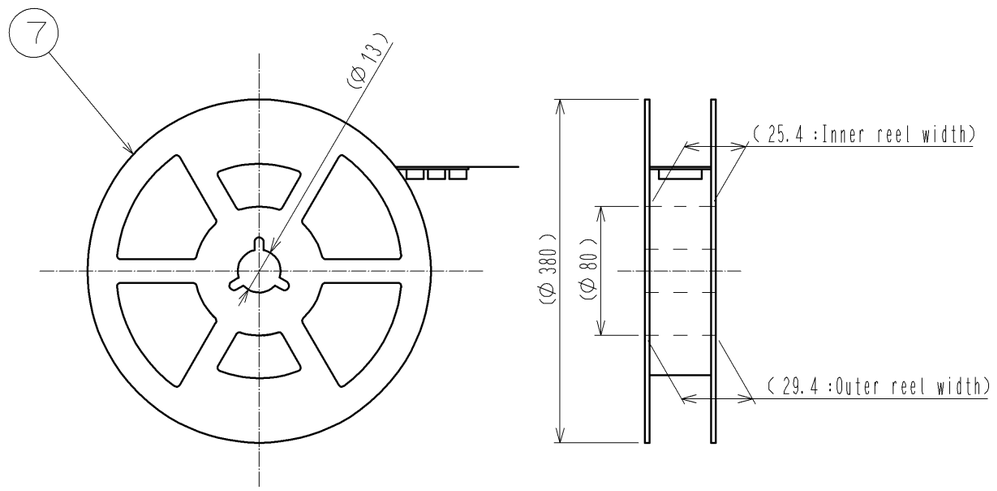

NOTE 5 The dimensions in parentheses are for reference.
6 Per reel : 5000 connectors.
7 Refer to JIS C 0806
(Packaging of components for automatic handling.)

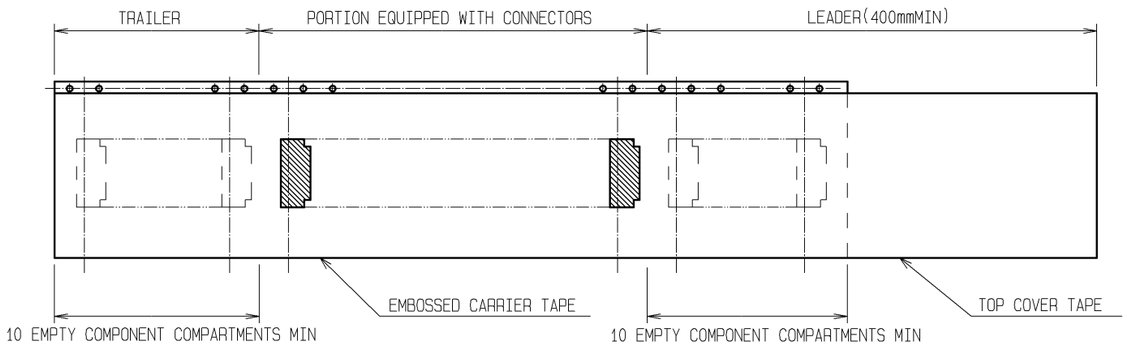

<DRAWING FOR PACKING>

HRS	DRAWING NO.	EDC3-326746-01
	PART NO.	FH34SW-12S-0.5SH(50)
	CODE NO.	CL580-1233-3-50 △ 2/4

This connector features small,thin and back flip design,
requiring delicate and careful handling.
Read through the instructions shown below and handle the connector properly.

[Operation and Precautions]

1.Initial condition

Actuator does not have to be operated before inserting FPC,
as the connector is delivered with the actuator opened.

[Caution]
-Do not operate the actuator before inserting FPC.
Operating the actuator without FPC could make the contact
deformation which could prevent FPC insertion.

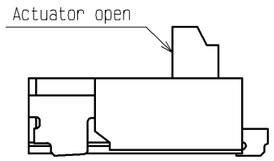

-Open when delivered-

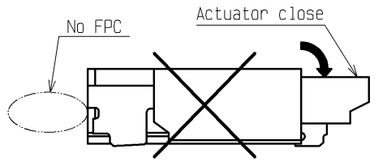

-Improper operation-

2.How to insert FPC

This connector has contacts on the top.Insert the FPC with the exposed conductors face up.

[Caution]
-Insert the FPC with the actuator opened.
-Do not insert the FPC with the conductor surface face down.
-Insert the FPC into the connector opening horizontally to the board plane.
Insert it properly to the very end.
-Twisting the FPC to up and down,right and left or an angle could cause contact
deformation and contact failure.

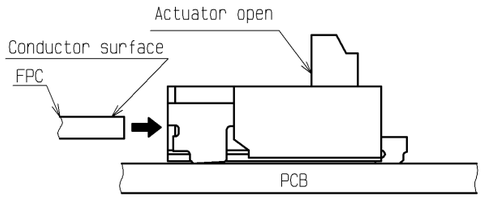

-Proper FPC insertion-

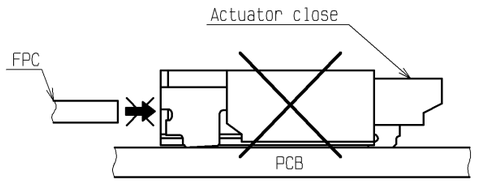

-Improper FPC insertion-

3.FPC insertion check(for FPC pattern only applicable to FH34S)

Improper assembly modes are prevented by visual check,comparing positions
of housing opening end line and FPC pattern line.

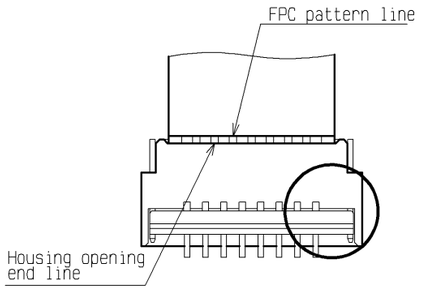

-Properly assembled-

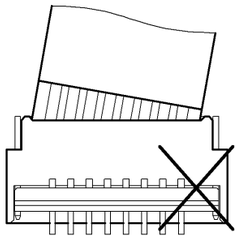
-Improperly assembled-
(angle insertion)

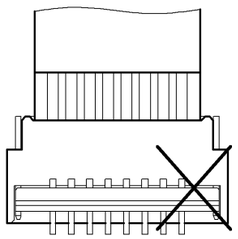
-Improperly assembled-
(Insufficiently insertion)

4.How to lock

Apply load to rotate the actuator by 90 degrees after inserting the FPC.

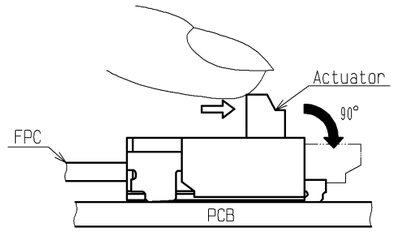

-Proper operation-

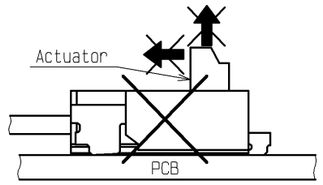

-Improper operation-

[Caution]
-The actuator rotates around the rotational axis as shown below.
-Do not rotate the actuator to the counter direction.
Do not pinch or pick the actuator to lift.Otherwise,it may break.
-Apply load to the mid-point on the actuator to rotate it.
Do not apply force to side end of the actuator.
Uneven load could twist the actuator and cause half mating.
-Do not apply excess force to the housing during the operation.

[Actuator movable range]
(Side view)

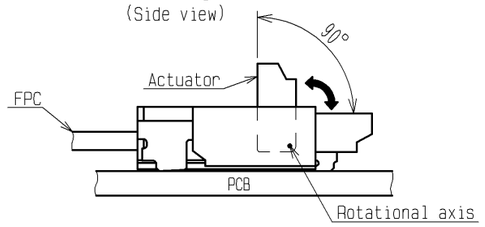

[Actuator operation area(lock and release)]
(Top view)

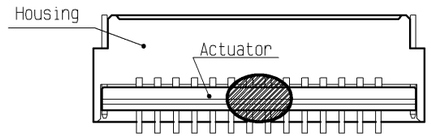

Apply load to the mid-point of the actuator.

5.How to remove FPC(How to unlock)

Slowly apply load to rotate the actuator by 90 degrees
to release the lock and remove the FPC.

[Caution]
-Do not press down the actuator toward connector when operating.
Otherwise it could deform the contact.
-The actuator is opened up to the movable limit 90 degrees.
Do not open the actuator beyond the specified degree or
apply excess force to the actuator.
-Please operate at the mid-point when opening the actuator.
Do not lift up only the side-end of the actuator,or it may twist
the actuator and cause breakage.
-Please note that this connector is back flip style connector,
which the opening area for FPC insertion and the actuator is on
opposite side each other.
Do not try to lift the actuator at the FPC insertion
opening side,otherwise it may be breakage.

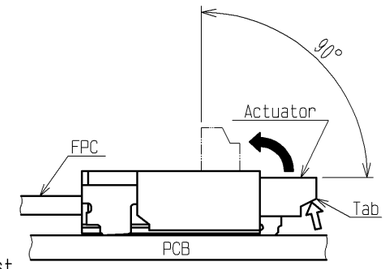

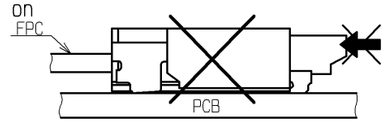

<INSTRUCTION MANUAL 1>

HRS	DRAWING NO.	EDC3-326746-01
	PART NO.	FH34SW-12S-0.5SH(50)
	CODE NO.	CL580-1233-3-50 △ 3/4

This connector features small,thin and back flip design,requiring delicate and careful handling.
Read through the instructions shown below and handle the connector properly.

[Instruction for mounting on the board]

♦Warp of board
Minimize warp of the board as much as possible.
Lead co-planarity including reinforced metal fittings is 0.1mm or less.
Too much warp of the board may result in a soldering failure.

♦Load to connector
Do not apply mechanical stress to the connector before mounting on the board.
Otherwise,the connector may be broken.
Do not insert the FPC or operate the connector bofore mounting.

♦Load to board
-Splitting a large board into several pieces.
-Screwing the board
Avoid the handling described above so that no force is applied on the board during the assembly process.
Otherwise,the connector may become defective.

♦Reflow temperature profile
Apply reflow temperature profile within the specified conditions.
In individual applications,the actual temperature may vary,
depending on solder paste type,volume/thickness and board size/thickness.
Consult your solder paste and equipment manufacturer for specific recommendations.

♦Amount of bend of board
The bend of a 100-mm wide board should be 1mm or less as shown below.
The bend of board could apply stress on the connector and it may bocome defective.

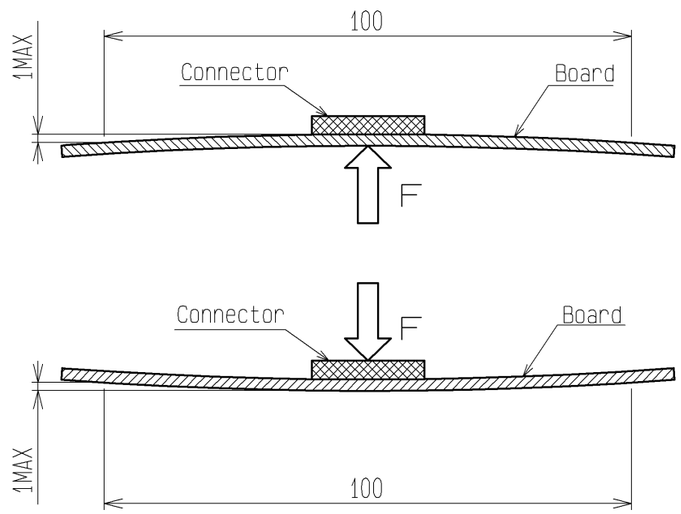

[Precautions for design]

1. During FPC wiring,ensure that stress is not applied directly to the connector.
Do not bend the FPC excessively near the connector during use,or it may cause contact failure or FPC breakage.
Stabilizing the FPC is recommended.

2. Keep a sufficient FPC insertion space in the stage of the layout in order to avoid incorrect FPC insertion.
Appropriate FPC length and component layout are recommended for assembly ease.
Too short FPC length makes assembly difficult.

3. Follow the recommended PCB layout,FPC design and the metal mask opening design.

4. Make adjustments with the FPC manufacturer for FPC bending performance and wire breakage.

5. Keep spaces for the actuator movement and its operation for PCB design and component layout.

[Other instructions]

♦Instructions on manual soldering
Follow the instructions shown below when soldering the connector manually during repair work,etc.

1. Do not perform manual soldering with the FPC inserted into the connector.

2. Do not heat the connector excessively.Be very careful not to let the soldering iron contact any parts other than connector leads.Otherwise,the connector may be deformed or melt.

3. Do not apply excessive solder(or flux).
If excessive solder(or flux)is applied on the terminals,solder or flux may adhere to the contacts or rotating parts of the actuator,resulting in poor contact or a rotation failure of the actuator.
Supplying excessive solder to the metal fittings may hinder actuator rotation,
resulting in breakage of the connector.

<INSTRUCTION MANUAL 2>

HRS	DRAWING NO.	EDC3-326746-01
	PART NO.	FH34SW-12S-0.5SH(50)
	CODE NO.	CL580-1233-3-50 △ 4/4